N3050-606-LP1

Chipset	GPU	GeForce RTX 3050
	Manufacturing Process	8nm
	Chip code	GA107-325-A1
	CUDA cores	2304
Hardware ID	PCI IDs	Device ID：2584 Vendor ID：10DE Sub-Vendor ID：7377 Subsystem ID：0000
Core Clocks	Base/Boost Clock	1042Mhz/1470Mhz
	Turbo Key	N/A
Memory Specs	Memory Clock	14Gbps
	Memory Size	6GB
	Memory Type	GDDR6
	Memory Bandwidth	168GB/s
	Memory Interface	96 Bit
Display and Connectors	Video Output	1*DP 1.4a + 1*HDMI 2.1
	Maximum Digital Resolution	7680x4320
	PCI Express	PCIE 4.0 x8
	NVIDIA NVLink (SLI-Ready)	No
Thermal and Power Specs	Maximum GPU Temperature	93℃（NV）
	Graphics Card Power	70W
	Power Connectors	/
Cooling	Fan Type	The turbine cooling
	Fan Power Connector	4Pin
3D API	DirectX	DirectX 12 Ultimate
	OpenGL	OpenGL 4.6
Others	Supported NV Technologies	NVIDIA DLSS, NVIDIA G-SYNC, 3rd Gen Ray Tracing Cores
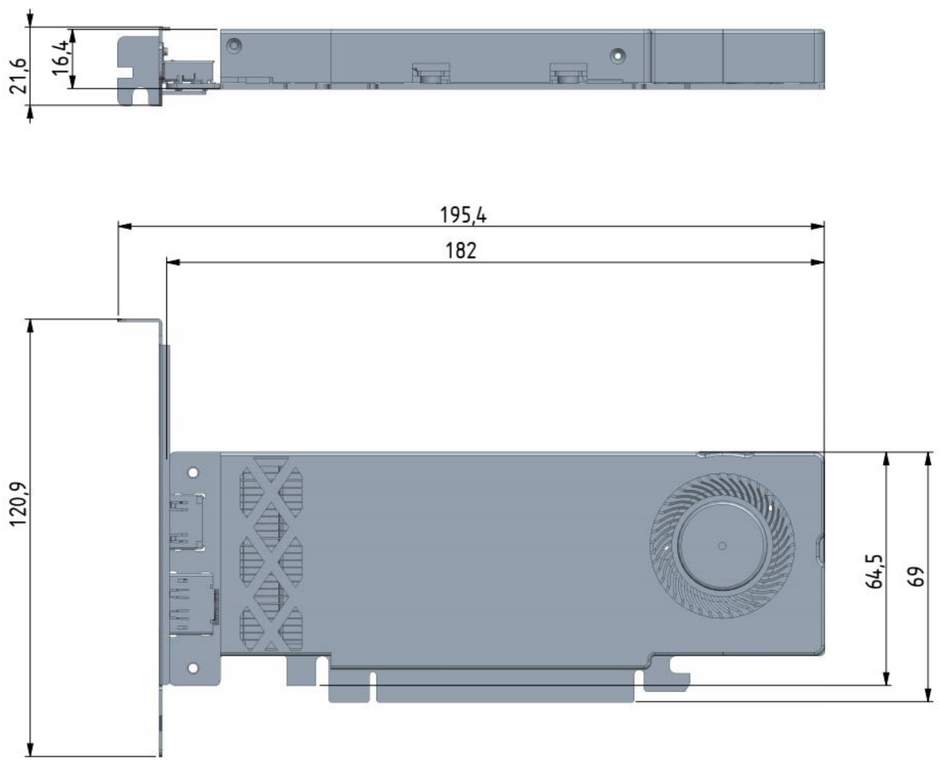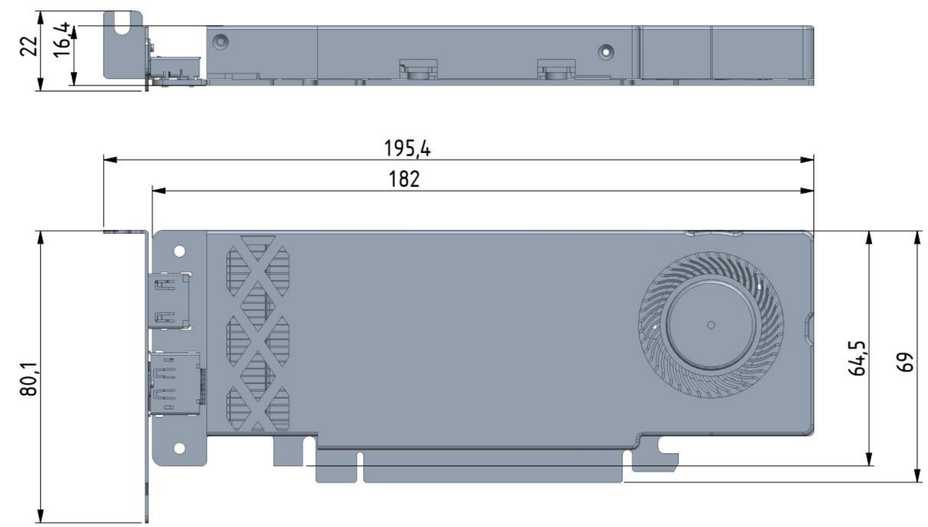
3D Drawing